IXYS

HiPerFET™ MOSFET ISOPLUS220™

IXFC 80N085

V_{DSS} = 85 V
I_{D25} = 80 A
$R_{DS(on)}$ = 11 mΩ

$t_{rr} \leq 200$ ns

Electrically Isolated Back Surface

N-Channel Enhancement Mode
High dv/dt, Low t_{rr}, HDMOS™ Family

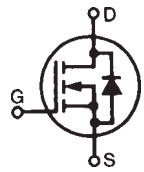

Symbol	Test Conditions	Maximum Ratings	
V_{DSS}	T_J = 25°C to 150°C	85	V
V_{DGR}	T_J = 25°C to 150°C; R_{GS} = 1 MΩ	85	V
V_{GS}	Continuous	±20	V
V_{GSM}	Transient	±30	V
I_{D25}	T_C = 25°C	80	A
$I_{L(RMS)}$	Lead current limit	45	A
I_{DM}	T_C = 25°C, pulse width limited by T_{JM}	75	A
I_{AR}	T_C = 25°C	320	A
E_{AR}	T_C = 25°C	30	mJ
E_{AS}		1.0	J
dv/dt	$I_S \leq I_{DM}$, di/dt ≤ 100 A/µs, $V_{DD} \leq V_{DSS}$, $T_J \leq$ 150°C, R_G = 2 Ω	5	V/ns
P_D	T_C = 25°C	230	W
T_J		-55 ... +150	°C
T_{JM}		150	°C
T_{stg}		-55 ... +150	°C
T_L	1.6 mm (0.062 in.) from case for 10 s	300	°C
F_C	Mounting force	11..65/2.4..11	Nm/lb
V_{ISOL}	50/60 Hz, RMS t = 1 minute leads-to-tab	2500	V~
Weight		2	g

Symbol	Test Conditions		Characteristic Values (T_J = 25°C, unless otherwise specified) min.	typ.	max.	
V_{DSS}	V_{GS} = 0 V, I_D = 250 µA		85			V
$V_{GS(th)}$	V_{DS} = V_{GS}, I_D = 4 mA		2.0		4.0	V
I_{GSS}	V_{GS} = ±20 V_{DC}, V_{DS} = 0				±100	nA
I_{DSS}	V_{DS} = V_{DSS}	T_J = 25°C			50	µA
	V_{GS} = 0 V	T_J = 125°C			1	mA
$R_{DS(on)}$	V_{GS} = 10 V, I_D = I_T Notes 1, 2				11	mΩ

ISOPLUS220™

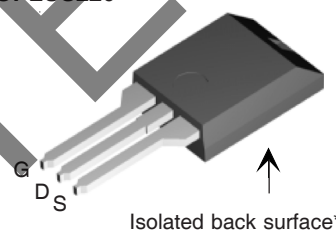

Isolated back surface*

G = Gate, D = Drain,
S = Source

* Patent pending

Features

- Silicon chip on Direct-Copper-Bond substrate
  - High power dissipation
  - Isolated mounting surface
  - 2500V electrical isolation
- Low drain to tab capacitance (<35pF)
- Low $R_{DS(on)}$
- Rugged polysilicon gate cell structure
- Unclamped Inductive Switching (UIS) rated
- Fast intrinsic Rectifier

Applications

- DC-DC converters
- Battery chargers
- Switched-mode and resonant-mode power supplies
- DC choppers
- AC motor control

Advantages

- Easy assembly: no screws or isolation foils required
- Space savings
- High power density
- Low collector capacitance to ground (low EMI)

OBSOLETE

© 2004 IXYS All rights reserved

Symbol	Test Conditions	Characteristic Values (T_J = 25°C, unless otherwise specified) min.	typ.	max.	
g_{fs}	V_{DS} = 10 V; I_D = I_T Notes 1, 2	35	55		S
C_{iss}	V_{GS} = 0 V, V_{DS} = 25 V, f = 1 MHz		4800		pF
C_{oss}			1675		pF
C_{rss}			590		pF
$t_{d(on)}$	V_{GS} = 10 V, V_{DS} = 0.5 • V_{DSS}, I_D = 0.5 • I_{D25}, R_G = 2.5 Ω (External)		50		ns
t_r			75		ns
$t_{d(off)}$			95		ns
t_f			31		ns
$Q_{g(on)}$	V_{GS} = 10 V, V_{DS} = 0.5 • V_{DSS}, I_D = I_T Notes 2		180		nC
Q_{gs}			42		nC
Q_{gd}			75		nC
R_{thJC}				0.54	K/W
R_{thCK}			0.25		K/W

Source-Drain Diode

Symbol	Test Conditions	Characteristic Values (T_J = 25°C, unless otherwise specified) min.	typ.	max.	
I_S	V_{GS} = 0 V			80	A
I_{SM}	Repetitive; pulse width limited by T_{JM}			320	A
V_{SD}	I_F = I_S, V_{GS} = 0 V, Note 1			1.5	V
t_{rr}	I_F = 25A -di/dt = 100 A/µs, V_R = 50 V			200	ns
Q_{RM}			0.5		µC
I_{RM}			6		A

Note: 1. Pulse test, t ≤ 300 µs, duty cycle d ≤ 2 %
2. I_T = 40A

ISOPLUS220LV Outline

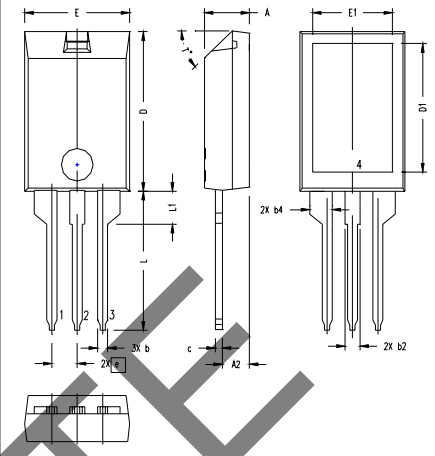

SYM	INCHES MIN	INCHES MAX	MILLIMETERS MIN	MILLIMETERS MAX
A	.157	.197	4.00	5.00
A2	.098	.118	2.50	3.00
b	.035	.051	0.90	1.30
b2	.049	.065	1.25	1.65
b4	.093	.100	2.35	2.55
c	.028	.039	0.70	1.00
D	.591	.630	15.00	16.00
D1	.472	.512	12.00	13.00
E	.394	.433	10.00	11.00
E1	.295	.335	7.50	8.50
e	.100 BASIC		2.55 BASIC	
L	.512	.571	13.00	14.50
L1	.118	.138	3.00	3.50
T°			42.5°	47.5°

Notes:
1. Lead 1 = Gate
2. Lead 2 = Drain
3. Lead 3 = Source
4. Back surface 4 is electrically isolated from leads 1, 2 & 3

OBSOLETE

IXYS reserves the right to change limits, test conditions, and dimensions.

IXYS MOSFETs and IGBTs are covered by one or more of the following U.S. patents: 4,835,592 4,931,844 5,049,961 5,237,481 6,162,665 6,404,065 B1 6,683,344 6,727,585 4,850,072 5,017,508 5,063,307 5,381,025 6,259,123 B1 6,534,343 6,710,405B2 4,881,106 5,034,796 5,187,117 5,486,715 6,306,728 B1 6,583,505 6,710,463